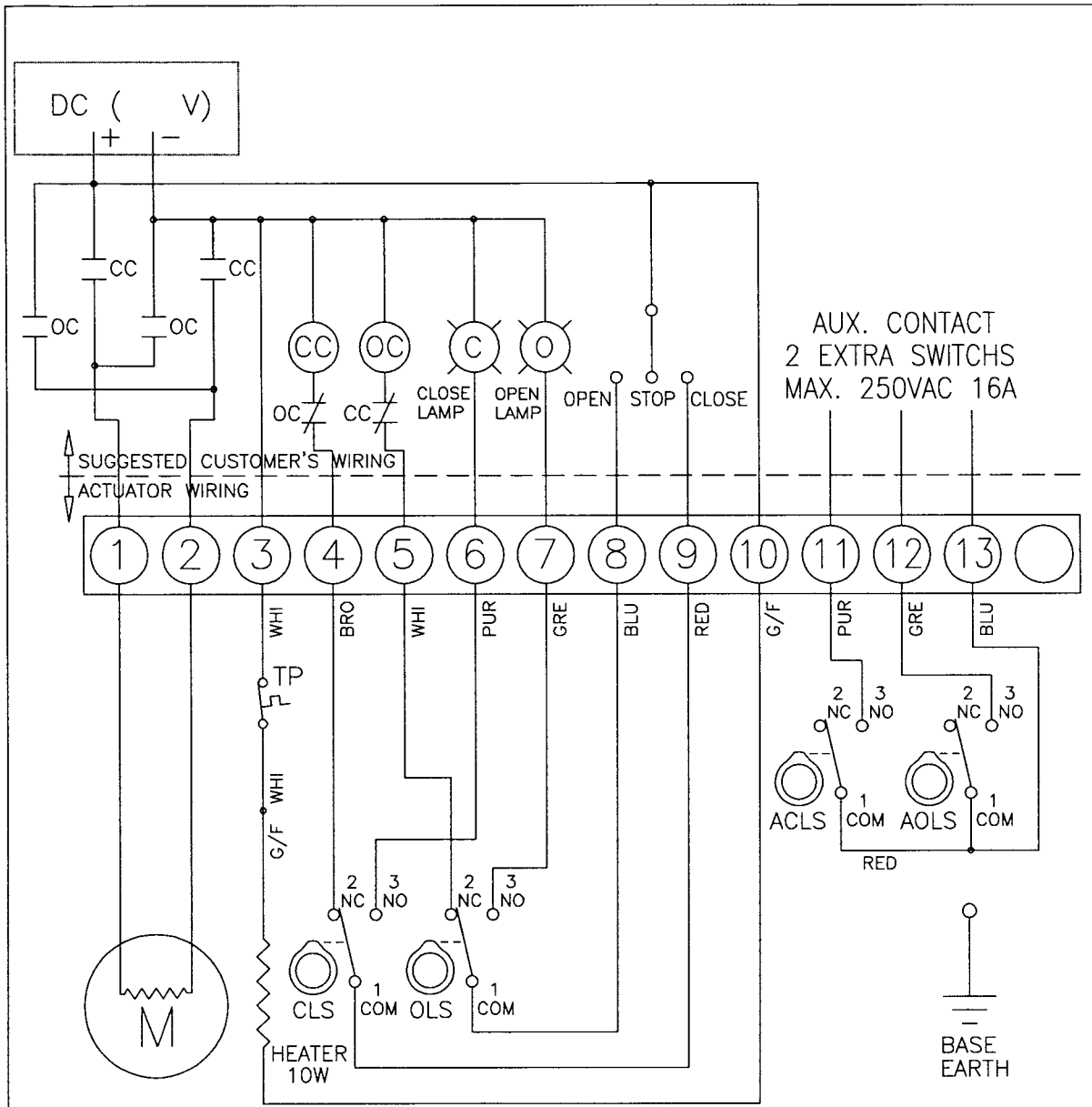

TORQUE AND LIMIT SWITCH OPERATION			
SWITCH	CLOSE ←	INTERMEDIATE	→ OPEN
CLS 1−2			
CLS 1−3			
OLS 1−2			
OLS 1−3			
ACLS 1−2			
ACLS 1−3			
AOLS 1−2			
AOLS 1−3			

SYMBOL	DESCRIPTION	RATING
CLS	CLOSE LIMIT SWITCH	250VAC 10A
OLS	OPEN LIMIT SWITCH	250VAC 10A
ACLS	AUX. CLOSE LIMIT SWITCH	250VAC 16A
AOLS	AUX. OPEN LIMIT SWITCH	250VAC 16A
CC	CLOSE MAGNETIC COIL	
OC	OPEN MAGNETIC COIL	
TP	THERMAL PROTECTOR	250VAC 15A

*EACH ACTUATOR SHOULD BE POWERED THROUGH IT'S OWN INDIVIDUAL SWITCH OR RELAY CONTACTS TO PREVENT CROSS FEED BETWEEN TWO OR MORE ACTUATORS.

DRAW	P.S. KIM	CHECK	
DESIGN	S.I. CHOI	APPR.	

PART NAME: DC WIRING DIAGRAM ALS

DWG. NO: HQ−8200−A

ISSU. DEPT. HADR | DATE 2001.05.10

HQ−008

APPLICATION

HKC

HK CONTROMATIC CO., LTD.