# LMK 858

## Separable Plastic Probe

Ceramic Sensor

accuracy according to IEC 60770:
standard: 0.35 % FSO
option: 0.25 % FSO

### Nominal pressure

from 0 ... 40 cm$H_2O$ up to 0 ... 100 m$H_2O$

### Output signals

2-wire: 4 ... 20 mA
3-wire: 0 ... 10 V
others on request

### Special characteristics

- diameter 45 mm
- cable assembly and probe head separable
- chemical resistance
- housing PP-HT

### Optional versions

- diaphragm 99.9 % $Al_2O_3$
- different kinds of cables and elastomers
- cable protection (on request)

The separable plastic probe LMK 858 is designed for level measurement in most aggressive media. Usage in more viscous media as for example sludge is possible because of the semi-flush diaphragm.

In order to facilitate stock-keeping and maintenance the probe head is plugged to the cable assembly with a connector and can be changed easily.

### Preferred areas of use are

*Sewage*
waste water treatment
water recycling
dumpsite

*Aggressive media*
level measurement in most of acids and lyes

TRI-MATIC AG - CH-6331 Hünenberg
TRI-MATIC SA - CH-1400 Yverdon-les-Bains
tri-matic.ch
Tel 041 780 22 22 info@tri-matic.ch
Tél 024 426 12 13 filiale@tri-matic.ch

| **Input pressure range** | | | | | | | | | | | | | | |
|---|---|---|---|---|---|---|---|---|---|---|---|---|---|---|
| Nominal pressure gauge | [bar] | 0.04 | 0.06 | 0.1 | 0.16 | 0.25 | 0.4 | 0.6 | 1 | 1.6 | 2.5 | 4 | 6 | 10 |
| Level | [$mH_2O$] | 0.4 | 0.6 | 1 | 1.6 | 2.5 | 4 | 6 | 10 | 16 | 25 | 40 | 60 | 100 |
| Overpressure | [bar] | 2 | 2 | 4 | 4 | 6 | 6 | 8 | 8 | 15 | 25 | 25 | 35 | 35 |

| **Output signal / Supply** | | |
|---|---|---|
| Standard | 2-wire: 4 ... 20 mA / $V_S$ = 9 ... 32 $V_{DC}$ | |
| Option 3-wire | 3-wire: 0 ... 10 V / $V_S$ = 12.5 ... 32 $V_{DC}$ | |
| **Performance** | | |
| Accuracy [1] | standard: ≤ ± 0.35 % FSO | option: ≤ ± 0.25 % FSO |
| Permissible load | $R_{max} = [(V_S - V_{S\,min}) / 0.02\ A]\ \Omega$ | |
| Influence effects | supply: 0.05 % FSO / 10 V | load: 0.05 % FSO / kΩ |
| Long term stability | ≤ ± 0.1 % FSO / year at reference conditions | |
| Turn-on time | 700 msec | |
| Mean response time | < 200 msec | measuring rate 5/sec |
| Max. response time | 380 msec | |
| *[1] accuracy according to IEC 60770 – limit point adjustment (non-linearity, hysteresis, repeatability)* | | |
| **Thermal effects (Offset and Span)** | | |
| Thermal error | ≤ ± 0.1 % FSO / 10 K | in compensated range 0 ... 50 °C |
| **Permissible temperatures** | | |
| Permissible temperatures | medium / electronic / environment / storage: -25 ... 80 °C | |
| **Electrical protection [2]** | | |
| Short-circuit protection | permanent | |
| Reverse polarity protection | no damage, but also no function | |
| Electromagnetic compatibility | emission and immunity according to EN 61326 | |
| *[2] additional external overvoltage protection unit in terminal box KL 1 or KL 2 with atmospheric pressure reference available on request* | | |
| **Electrical connection** | | |
| Cable with sheath material [3] | PVC (-5 … 70 °C) grey Ø 7.4 mm<br>PUR (-25 … 70 °C) black Ø 7.4 mm<br>FEP [4] (-25 … 70 °C) black Ø 7.4 mm | |
| Cable capacitance | signal line/shield also signal line/signal line: 160 pF/m | |
| Cable inductance | signal line/shield also signal line/signal line: 1 µH/m | |
| Bending radius | static installation: 10-fold cable diameter | dynamic application: 20-fold cable diameter |
| *[3] shielded cable with integrated ventilation tube for atmospheric pressure reference*<br>*[4] do not use freely suspended probes with an FEP cable if effects due to highly charging processes are expected* | | |
| **Materials (media wetted)** | | |
| Housing | PP-HT | |
| Seals | FKM, EPDM, others on request | |
| Diaphragm | standard: ceramics $Al_2O_3$ 96 % | option: ceramics $Al_2O_3$ 99.9 % |
| Cable sheath | PVC, PUR, FEP, others on request | |
| **Miscellaneous** | | |
| Option cable protection (on request) | prepared for mounting with PP-HT pipe Ø 25 mm; available as compact product (standard: pipe with a total length up to 2 m possible) | |
| Current consumption | max. 25 mA | |
| Weight | approx. 400 g (without cable) | |
| Ingress protection | IP 68 | |
| CE-conformity | EMC Directive: 2014/30/EU | |

**Wiring diagram**

2-wire-system (current)

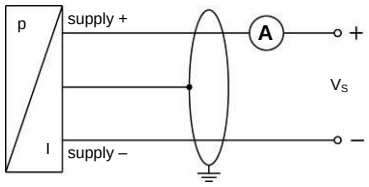


3-wire-system (voltage)

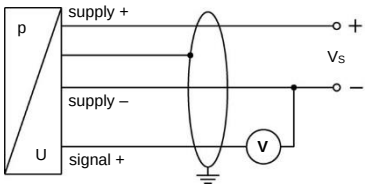


| **Pin configuration** | | |
|---|---|---|
| Electrical connection | M12x1 (4-pin) 5 | cable colours (IEC 60757) |
| Supply +<br>Supply –<br>Signal + (only for 3-wire) | 3<br>4<br>1 | WH (white)<br>BN (brown)<br>GN (green) |
| Shield | 2 | GNYE (green-yellow) |
| *[5] in separated version* | | |

**Dimensions (mm / in)**

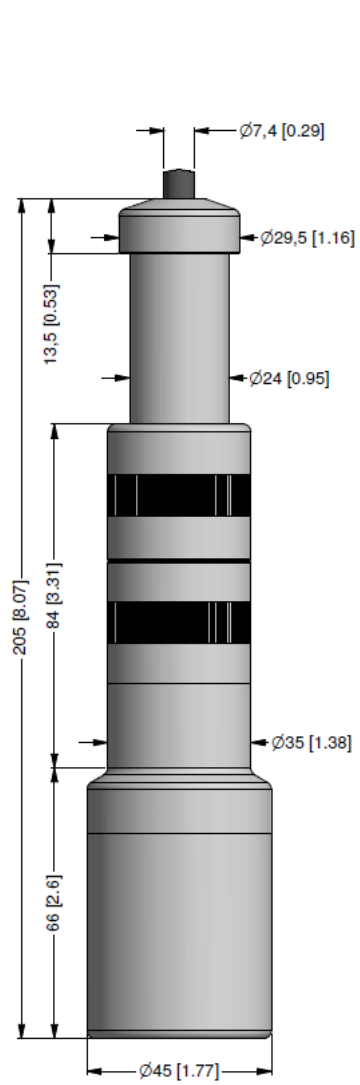


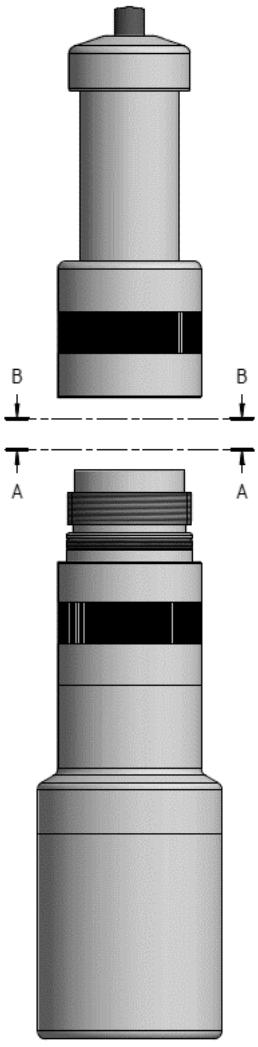


separability of
probe head and cable assembly

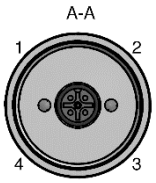


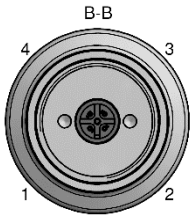


## Accessories

**Terminal clamp**

| **Technical data** | | | |
|---|---|---|---|
| Suitable for | all probes with cable ∅ 5.5 ... 10.5 mm | | |
| Material of housing | standard: steel, zinc plated | optionally: stainless steel 1.4301 (304) | |
| Material of clamping jaws and positioning clips | PA (fibre-glass reinforced) | | |
| Dimensions (mm) | 174 x 45 x 32 | | |
| Hook diameter | 20 mm | | |
| **Ordering type** | | **Ordering code** | **Weight** |
| Terminal clamp, steel, zinc plated | | Z100528 | approx. 160 g |
| Terminal clamp, stainless steel 1.4301 (304) | | Z100527 | |

BD|SENSORS
pressure measurement

# Ordering code LMK 858

LMK 858 ☐☐☐-☐☐☐☐-☐-☐-☐-☐-☐-☐-☐-☐☐☐-☐☐☐

| | | | | | | | | | | | | | | | | | | | | | | |
|---|---|---|---|---|---|---|---|---|---|---|---|---|---|---|---|---|---|---|---|---|---|---|
| **Pressure** | | | | | | | | | | | | | | | | | | | | | | |
| | in bar | 4 | 1 | 5 | | | | | | | | | | | | | | | | | | |
| | in $mH_2O$ | 4 | 1 | 6 | | | | | | | | | | | | | | | | | | |
| **Input** | **[$mH_2O$]** | **[bar]** | | | | | | | | | | | | | | | | | | | | |
| | 0.4 | 0.04 | | | 0 | 4 | 0 | 0 | | | | | | | | | | | | | | |
| | 0.6 | 0.06 | | | 0 | 6 | 0 | 0 | | | | | | | | | | | | | | |
| | 1.0 | 0.10 | | | 1 | 0 | 0 | 0 | | | | | | | | | | | | | | |
| | 1.6 | 0.16 | | | 1 | 6 | 0 | 0 | | | | | | | | | | | | | | |
| | 2.5 | 0.25 | | | 2 | 5 | 0 | 0 | | | | | | | | | | | | | | |
| | 4.0 | 0.40 | | | 4 | 0 | 0 | 0 | | | | | | | | | | | | | | |
| | 6.0 | 0.60 | | | 6 | 0 | 0 | 0 | | | | | | | | | | | | | | |
| | 10 | 1.0 | | | 1 | 0 | 0 | 1 | | | | | | | | | | | | | | |
| | 16 | 1.6 | | | 1 | 6 | 0 | 1 | | | | | | | | | | | | | | |
| | 25 | 2.5 | | | 2 | 5 | 0 | 1 | | | | | | | | | | | | | | |
| | 40 | 4.0 | | | 4 | 0 | 0 | 1 | | | | | | | | | | | | | | |
| | 60 | 6.0 | | | 6 | 0 | 0 | 1 | | | | | | | | | | | | | | |
| | 100 | 10 | | | 1 | 0 | 0 | 2 | | | | | | | | | | | | | | |
| | | customer | | | 9 | 9 | 9 | 9 | | | | | | | | | | | | | | consult |
| **Housing** | | | | | | | | | | | | | | | | | | | | | | |
| | | PP-HT | | | | | | | R | | | | | | | | | | | | | |
| | | customer | | | | | | | 9 | | | | | | | | | | | | | consult |
| **Diaphragm** | | | | | | | | | | | | | | | | | | | | | | |
| | | ceramics $Al_2O_3$ 96% | | | | | | | | 2 | | | | | | | | | | | | |
| | | ceramics $Al_2O_3$ 99.9% | | | | | | | | C | | | | | | | | | | | | |
| | | customer | | | | | | | | 9 | | | | | | | | | | | | consult |
| **Output** | | | | | | | | | | | | | | | | | | | | | | |
| | | 4 … 20 mA / 2-wire | | | | | | | | | 1 | | | | | | | | | | | |
| | | 0 … 10 V / 3-wire | | | | | | | | | 3 | | | | | | | | | | | |
| | | customer | | | | | | | | | 9 | | | | | | | | | | | consult |
| **Seals** | | | | | | | | | | | | | | | | | | | | | | |
| | | FKM | | | | | | | | | | 1 | | | | | | | | | | |
| | | EPDM | | | | | | | | | | 3 | | | | | | | | | | |
| | | customer | | | | | | | | | | 9 | | | | | | | | | | consult |
| **Electrical connection** | | | | | | | | | | | | | | | | | | | | | | |
| | | PVC-cable (grey, Ø 7.4 mm) [1] | | | | | | | | | | | 1 | | | | | | | | | |
| | | PUR-cable (black, Ø 7.4 mm) [1] | | | | | | | | | | | 2 | | | | | | | | | |
| | | FEP-cable (black, Ø 7.4 mm) [1] | | | | | | | | | | | 3 | | | | | | | | | |
| | | customer | | | | | | | | | | | 9 | | | | | | | | | consult |
| **Accuracy** | | | | | | | | | | | | | | | | | | | | | | |
| standard | | 0.35 % FSO | | | | | | | | | | | | 3 | | | | | | | | |
| option | | 0.25 % FSO | | | | | | | | | | | | 2 | | | | | | | | |
| | | customer | | | | | | | | | | | | 9 | | | | | | | | consult |
| **Cable length** | | | | | | | | | | | | | | | | | | | | | | |
| | | in m | | | | | | | | | | | | | | 9 | 9 | 9 | | | | |
| **Special version** | | | | | | | | | | | | | | | | | | | | | | |
| | | standard | | | | | | | | | | | | | | | | | 0 | 0 | 0 | |
| | | prepared for mounting with PP-HT pipe [2] | | | | | | | | | | | | | | | | | 1 | 0 | 6 | consult |
| | | customer | | | | | | | | | | | | | | | | | 9 | 9 | 9 | consult |

[1] shielded cable with integrated ventilation tube for atmospheric pressure reference
[2] pipe is not part of the supply